QBN7

SkŠŘovÍ rozv§dĺ¸ s vÍ suvnÍ m vyp²naļ em SF_6

Metalclad air-insulated switchgear

Do 38.5 kV
Up to 2000 A
25 kA

QBN7 je kovovĺ¸ krytÍ rozv§dĺ¸ se vzduchovou izolac², pro vnitŠ² prostŠed².
Sp²nac²m prvkem je vÍ suvnÍ vÍ konovÍ vyp²naļ SF_6.

QBN7 is an indoor metalclad air insulated switchgear with draw-out SF_6 circuit breaker and exclusively frontally operated.

EFACEC

QBN7

VLASTNOSTI

- Vysok§ spolehlivost
- Aktivn² i pasivn² ochrann®syst®my
- Modul§rn² kompaktn² konstrukce
- Moǵnost rozg²Śen² z obou stran
- MalĨ prostor pro instalaci
- Jednoduch§ instalace
- Jednoduch§ obsluha
- Ovl§d§n² vġech prvkŢ vĨ hradnĎ z pŚedn² strany
- Vysok§ elektrick§ a mechanick§ ġivotnost
- Moǵnost bohat®vĨ bavy na pŚ§n²

GENERAL CHARACTERISTICS

- High reliability
- Active and passive protection systems
- Modular and compact design
- Extensible
- Reduced installation area
- Easy to install
- Easy to operate
- Exclusively frontally operated
- Increased electrical and mechanical life
- Several equipment options are available

TECHNICKĆ SPECIFIKACE / TECHNICAL DATA

ELEKTRICK£ CHARAKTERISTIKY / ELECTRICAL DATA	
Jmenovit®napĎt² Rated voltage	**38,5 kV**
Izolaļ n² hladina - jmenovit®vĨ drġn®napĎt²:/Insulation level: - pŚ atmosf®rick®m impulsu (1,2 / Õs) - lightning impulse - stŚdav®napĎt² (50 Hz / 1 min.) - power frequency	 180 kV 80 kV (1 min)
JmenovitĨ kmitoļ et Frequency	50 Hz
JmenovitĨ proud na pŚpojnic²ch Busbar rated current	630 aġ/to 2000 A
JmenovitĨ proud odboļ ek Tee-off rated current	630 aġ/to 2000 A
Zap²nac² proud Short circuit making capacity	40 - 63 kA
JmenovitĨ kr§tkodobĨ vĨ drġnĨ proud Rated short-time withstand current	16 - 25 kA (1 nebo/or 3s)
MECHANICK£ CHARAKTERISTIKY / MECHANICAL CHARACTERISTICS	
StupeŘ ochrann®ho kryt² (IEC 60529) Protection Degree (IEC 60529)	IP3 (IP4 na pŚ§n²/under request)
Standardn² odst²n vnĎġ²ho n§tĎru Standard colours	RAL 7032
NORMĆLNĉPROVOZNĉPODMÂNKY / NORMAL SERVICE CONDITIONS	
Okoln² teplota Max./Min. Max./Min. ambient temperature	-5ÁC / 40ÜC
Maxim§ln² prŢmĎrn§ teplota (24 h) Maximum temperature 24 hour average	35ÁC
Maxim§ln² relativn² vlhkost Maximum relative humidity	95%
Maxim§ln² nadmoŚsk§ vĨ ġka Maximum altitude	1000 m
ROZMĎRY / DIMENSIONS	
VĨ ġka Height	2250 mm
Hloubka Depth	2570 mm
Ġ²Śka:/Width: - In pro odboļ ky do 1250 A - Tee-off current up to 1250 A - In pro odboļ ky do 2000 A - Tee-off current up to 2000 A	 1200 mm 1300 mm
PLNĎNĉNOREM / APPLICABLE STANDARDS	V souladu s pŚsluġnĨ mi normami IEC (RovnĎġ s pŚsluġnĨ mi normami BS) According to IEC standards (BS standards also applicable)

ZĆKLADNĉTYPY SKř ðNĉ

- PŚvod/VĨ vod: (CH/S)
- Spojka pŚpojnic: (SECC)
- PŚechodov§ skŚŘ spojky: (SUB)
- Ochrana pomocn®ho transform§toru: (TSA)

AVAILABLE FUNCTIONS

- Incoming/outgoing: (CH/S)
- Busbar sectioning: (SECC)
- Busbar riser: (SUB)
- Auxiliary Services Transformers protection: (TSA)

CH/S

Př ð/OD-VħVOD

INCOMING-OUTGOING

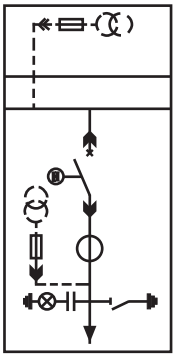

SECC

SPOJKA Př ðPOJNIC

BUSBAR SECTIONING

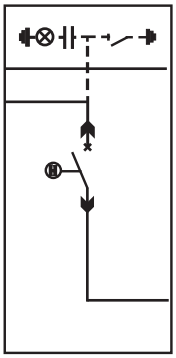

SUB

Př ECHODOVĆ SKř ĉœSPOJKY

BUSBAR RISER

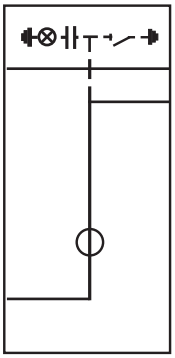

TSA

OCHRANA POMOCN£HO TRANSFORMĆTORU

TRANSFORMER PROTECTION

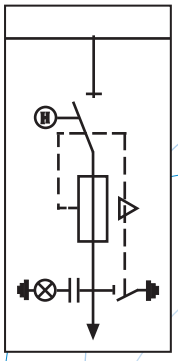

Na pŚ§n² jsou k dispozici dalġ² typy skŚn² podle poġadavku z§kazn²ka.

Other functions can be available, under request and client specification.

Př EHLEDOVħ VħKRES

TypickĨ PŚvod-VĨ vod

COMPOSITION

Incoming-Outgoing standard panel

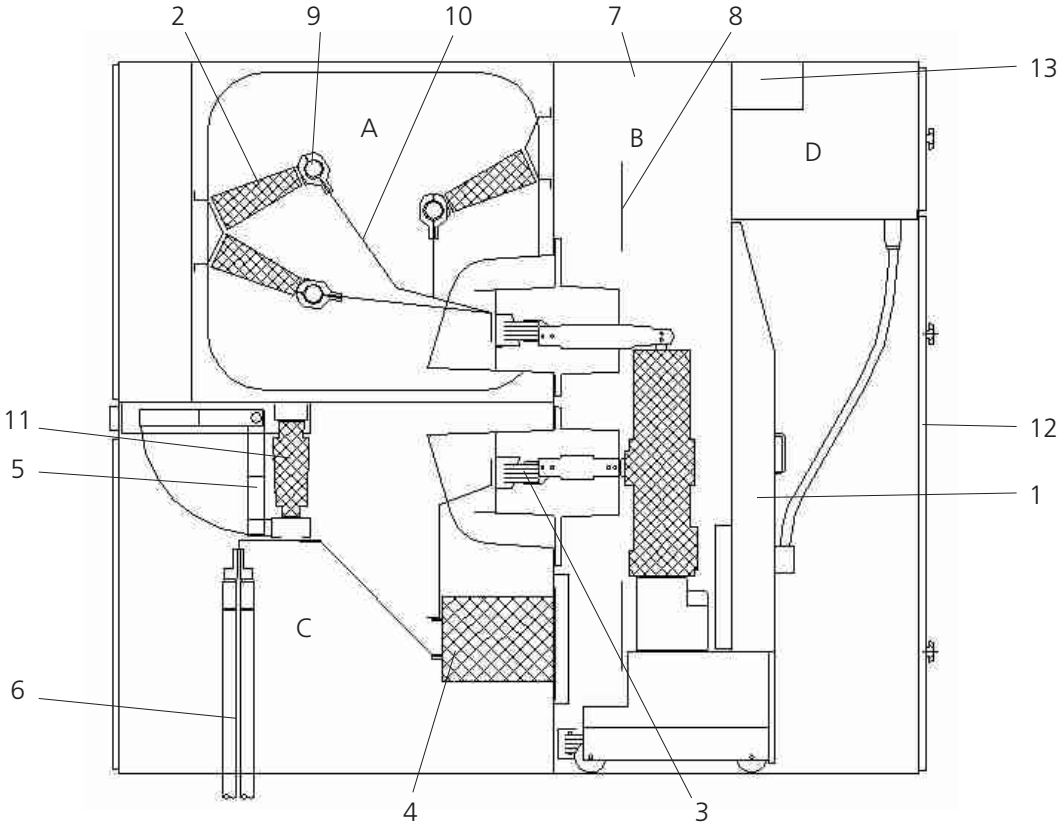

A - Modul hlavn²ch silovĨ ch pŚpojnic
B - Modul vĨ konov®ho vyp²naļ e
C - KabelovĨ prostor
D - Prostor n²zk®ho napŋ²

1 - VĨ suvnĨ vyp²naļ DIFLU
2 - Izolaļ n² drġ§k pŚpojnic
3 - PrŢchodky z lit®epoxidov®hmoty
4 - MŋŚc² transform§tory proudu
5 - Uzemŕovaļ
6 - PŚpojen² vysokonapŋŠovĨ ch kabelŢ
7 - PŚetlakov®klapky chr§n²c² pŚ vnitŚn²m oblouku
8 - Kovov®ochrann®pŚep§ġky
9 - Hlavn² silov®pŚpojnice
10 - Odboļ ky
11 - Kapacitn² dŋiļ napŋ²
12 - Ovl§dac² mechanismus uzemŕovaļ e
13 - PrŢbŋġnĨ kan§l pro kabely n²zk®ho napŋ²

A - Busbar compartment
B - Circuit breaker compartment
C - Cable compartment
D - Low voltage compartment

1 - Withdrawable DIFLU Circuit breaker
2 - Busbar insulator support
3 - Cast resin bushing
4 - Current transformers
5 - Cable earthing switch
6 - Cables
7 - Internal arc protection system
8 - Metallic safety shutters
9 - Busbar
10 - Tee-off's
11 - Voltage capacitor dividers
12 - Earth switch operating mechanisms
13 - Low voltage cables tray

DevidoNage produkty prochŚ² neustĨlĨ m vĨ vojem, obsaġen®¼laje se ļ asem mohou v nŋkterĨ ch detailech mŋhit./ Due to our policy of continuous development, specifications may change without notice. Not valid as contractual item.

EFACEC AMT - Aparelhagem de Média Tensão, S.A.

Zastoupen² v ĻR: EFACEC a.s. poboļ ka Praha
HnŋvkovskŚ 34, 148 00 PRAHA 4
Tel. / Fax.: (+420-) 267 911 063, 267 911 863
E-mail: efacec@efacec.cz web: www.efacec.cz

S²dlo / Main Office:
Apartado 1018 Å4466 - 952 S. Mamede Infesta - Portugal
Phone: + 351 229 562 300 ÅFax: + 351 229 562 870
E-mail: efacecamt@efacec.pt Åweb: www.amt.efacec.pt

MOD. MT 24 T 0503 A1